PRELIMINARY SPACEFLIGHT RESULTS FROM THE UNCOOLED INFRARED SPECTRAL IMAGING RADIOMETER (ISIR) ON SHUTTLE MISSION STS-85

James D. Spinhirne[a], V. Stanley Scott[a], John Cavanaugh[a], Steven Palm[b], Katherine Manizade[b], James W. Hoffman[c] and Ronald C. Grush[c]

[a]Goddard Space Flight Center, MC912, Greenbelt, MD 20771
[b]Science Systems Applications Inc., Lanham, MD
[c]Space Instruments Inc., Encinitas, CA, 92024

ABSTRACT

In August 1997 an infrared spectral imaging radiometer (ISIR) based on uncooled microbolometer array technology was flown on space shuttle mission STS-85. In this paper the design of the instrument and experimental goals are presented, and initial results from the flight mission are described. The ISIR instrument provided ¼ km resolution imagery at four wavelengths that were selected for cloud remote sensing. A major goal of the work is development of compact and less costly cloud imagers for small satellite missions. A large data set of earth imagery and test operations was obtained from the mission. In most regards the ISIR functioned within its design parameters.

Keyword: radiometer, multispectral, imaging, infrared, uncooled, pushbroom, microbolometer, blackbody

1. INTRODUCTION

One of the basic instruments to fly on polar orbiting Earth satellites is visible and infrared imaging radiometers. A limitation of current instruments is their size, weight and required power. The infrared spectral imaging radiometer (ISIR) experiment tests the potential of uncooled infrared detector array technology for application to compact earth imagers. The elimination of detector cooling requirements has many advantages for space. ISIR was flown as a low cost shuttle experiment on the STS-85 space shuttle mission in August 1997. The instrument is based on a microbolometer infrared array detector. ISIR was built under a Small Business Innovative Research proposal solicitation that was awarded to Space Instruments, Inc. by Goddard Space Flight Center (GSFC). GSFC subsequently carried out the data system, flight qualification and integration, testing and flight operations for the experiment. ISIR is part of a cloud science experiment. On STS-85 it was flown along with the Shuttle Laser Altimeter (SLA) experiment which provides direct measurements of cloud tops. Cloud height knowledge improves the interpretation of infrared radiance for cloud science applications.

The applications for Earth viewing visible and infrared imagers are measurements of sea surface temperature, cloud coverage, vegetation and aerosols. A major instrument example is the AVHRR (Advanced Very High Resolution Radiometers) instrument on several NOAA satellites.[1] For AVHRR type applications, an important aspect of the data is high temporal frequency of coverage from multiple platforms. There are five bands on the original instruments, two visible/near visible channels, two thermal infrared channels and a 3.7 μm channel. The wavelength resolution is fairly broad ranging from 100 nm for the visible channel and one micron for the thermal channels. An average 5.6 milliradian IFOV in the thermal infrared channels give a nadir spatial resolution of approximately 4 km. In the future there will likely be a requirement for continuity of AVHRR type imagery from LEO (low earth orbiting) satellites with the basic coverage, resolution and bands of current instruments. VIRS (Visible Infrared Scanner) on the TRMM (Tropical Rainfall Mapping Mission) satellite is a current instrument of the type.[1] VIRS for example is a meter in its longest dimension, weighs close to 50 kg and requires approximately 40 w for operation. The two most significant factors driving the size and weight of such instruments are the dimension of the optics necessary to obtain a sufficient signal throughput and the need for a radiative detector cooler for the infrared channels. Small and lower cost instruments will give the potential for more instruments on more satellites and thus increasing the temporal coverage or increasing the opportunity for different mission sets of instruments or different observation times. In addition there are benefits to earth remote sensing from increasing spatial resolution, the number of bands and the spectral resolution of bands. The MODIS instrument for the Earth Observing System for example has 36 bands with ¼ km resolution for some bands.[1] It is a large and costly instrument. In the future, advanced

technology may be able to provide higher spatial and spectral resolution in smaller and less costly instruments. ISIR tests one such technology.

In this paper we describe the design and operation of the ISIR instrument, and present initial results on imagery and operational performance.

2. INSTRUMENT DESIGN AND OPERATION

ISIR is a compact spectral imager providing radiometrically calibrated infrared imagery in three narrow spectral bands at 8.55, 10.8 and 11.8 microns and in a broad-band window from 7 to 13 microns. ISIR's main scientific mission is to image clouds from shuttle orbit and provide information on cloud top temperature and classification. A science goal is discrimination of cirrus cloud particle type by split-window analysis. The split-window analysis involves the differential radiance between the 10.8 and 11.8 μm atmospheric window channels.[2] The required NETD performance was 0.1 ^{o}K. The target spatial resolution was 250 m with a total image swath-width of 85 km from the shuttle altitude.

The basic operation mode of the ISIR instrument is as a pushbroom imager based on an array detector. A scene is imaged in a fixed staring mode with the cross track pixels providing the image swath. The basic design of the instrument is shown in Fig. 1. In order to be conveniently flown as a low cost payload on a space shuttle mission, the instrument made use of the Hitchhiker payload program. The Hitchhiker system provides a standard hardware, power, control and data interface to the shuttle. The ISIR instrument was built to attach to the upper end plate of a standard Hitchhiker canister. The basic system components and layout are shown in Fig. 1a. Imaging is obtained with a f/0.73 germanium lens of 50.8 mm focal

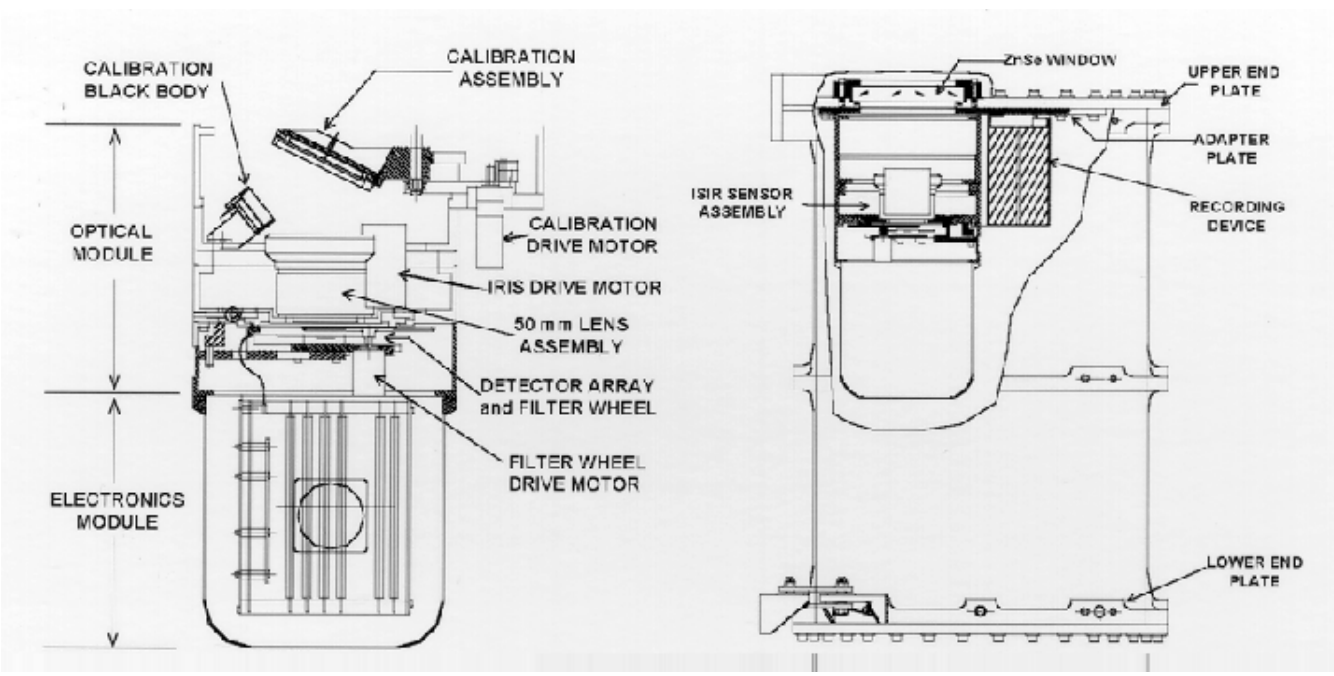

Figure 1. a) The installation of the ISIR instrument into a shuttle hitchhiker canister
b) The optical and mechanical layout design of the ISIR instrument.

length and 70 mm optical diameter. The cross track full field-of-view (FOV) is approximately 15°. A filter wheel between the lens and detector array is driven for spectral selection. In order to obtain the necessary instrument calibration during operation, an onboard blackbody calibration target is included. The blackbody is viewed by swinging in a mirror in front of the lens. A curved focussing mirror is used in order to minimize the size of the blackbody target. In order to use a pressurized Hitchhiker canister, the instrument views through a ZnSe window installed in the upper end plate as shown in 1b. It is possible to operate unpressurized in a Hitchhiker canister, using an open upper end plate, but the instrument and qualifications would be much more expensive. The overall instrument includes electronics and tape recorders. Two standard Exabyte-8505c 8mm tape recorders were used for data storage. The Hitchhiker interface includes some intermittent medium rate data down link capability for monitoring the instrument plus continuous low rate for status and commanding. The actual instrument and tape recorders are shown in Fig. 2.

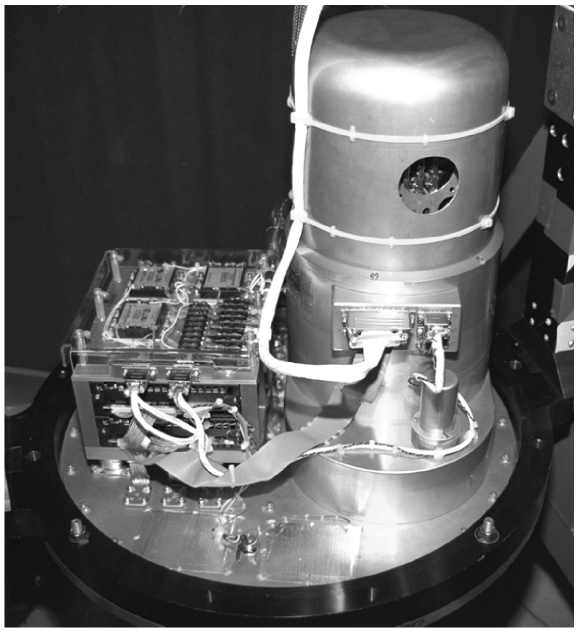

Figure 2. the ISIR as installed to a hitchhiker canister upper end plate

The primary advantage of the microbolometer array (MBA) detector used in ISIR is that it is a large-format (327x240) array providing good sensitivity (D* ~ 5e9 cmHz1/2/Watt) in the thermal IR at room temperature. MBA detectors[3] were developed in the late 1980's and early 1990's. Under the Defense Advanced Research Projects Agency (DARPA) High Density Array Development (HIDAD) program, managed by the Night Vision and Electro-Optics Directorate (NVEOD) at Fort Belvoir, the Honeywell Sensor and System Development Center developed the MBA detector using silicon micro-machining techniques to produce a monolithic array of silicon microbolometers and CMOS readout circuitry. Honeywell's MBA had 80,000 pixels (336 x 240) with average room-temperature sensitivity (NETD) of less than 50 milliKelvins, measured at a 30 Hz frame rate, with f/1.0 optics and a broadband (8 to 14 um) filter. In 1993, funded by GSFC, Honeywell demonstrated a nearly theoretical reduction in noise with frame averaging, suggesting MBAs would display similar noise reduction with time-delay and integration (TDI) techniques and spatial averaging. In 1994 Honeywell licensed MBA detector technology to Loral (now LMIRIS) and others who are now developing low-cost commercial versions of the MBA. In 1996, the second MBA array produced by Loral with DARPA funding was provided as Government Furnished Equipment (GFE) to Space Instruments, Inc. for use in the ISIR focal plane. No real assessment had been made of the spectral-radiometric performance of MBAs prior to the ISIR program. All previous tests of sensitivity (as reflected by NETD and minimum resolvable temperature difference (MRTD)) had been done broadband, because there had as yet been no applications for MBAs other than in night-vision cameras, for which narrow band sensitivity is irrelevant. In that sense the ISIR program is pioneering work with relevance to future earth-orbiting and planetary spectral sensors operating in the thermal IR.

The warm focal detectors are of course individually not as sensitive as that attainable with cooled detectors. The primary design issue for ISIR was whether it would be possible with signal integration to take advantage of the throughput potential of the approximately 80,000 detectors in the array for practical space imagery. The frame averaging approach, time delay integration (TDI), is diagramed in Fig. 3. The forward motion of the platform results in the scene image moving across the detector array. The rate at which the scene moves across the detector is determined by the height and velocity of the platform and the effective focal length of the imaging optics. Images are read off the camera at some rate. In the case of the first ISIR experiment, the frame rate was a fixed 60 Hz, but only every other frame was read out. TDI requires that the image motion across one pixel row and the frame read out rate be in synch. In TDI, successive rows of detectors are integrated in a time-delayed sequence, adding the pixel elements' signals that originate from the same earth location pixel. In the absence of correlated noise, this improves the signal-to-noise ratio (SNR) by the square root of the number of pixels in TDI; likewise in frame averaging, the SNR is improved by the square root of the number of frames. ISIR was designed to be flexible, operating in TDI (push broom scanning) or in stare-mode (direct frame integration without TDI) with or without frame averaging. The calculation of NEDT as a function of pixel integration that was used in the instrument design for the TDI is shown in Fig. 4. The primary mode that was planned was an integration of 40 frames or TDIx40. With TDIx40 the predicted NEDT was below 0.1 at all wavelengths for a 300 ^{o}K scene temperature. The coldest cloud tops have an equivalent brightness temperature below 200° K. The NEDT temperature scaling for the three narrow

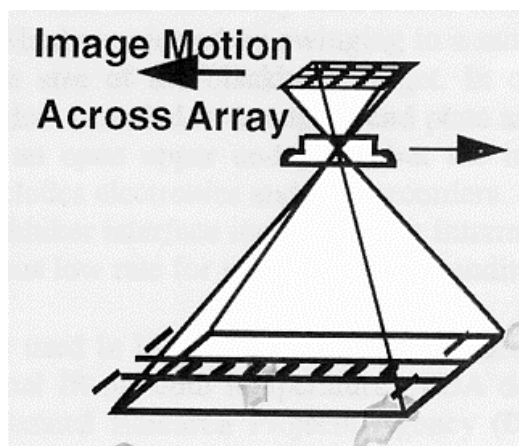

Figure 3. Diagram of the Time Delay Integration pushbroom operational mode.

band wavelengths from 300 to 200 °K is a factor of three to four for the 10.8 and 12 μm bands and seven for the 8.6 μm band. It is seen from Fig. 4 that the expected NEDT with TDIx40 for a 200 °K scene was still below 0.16 °K.

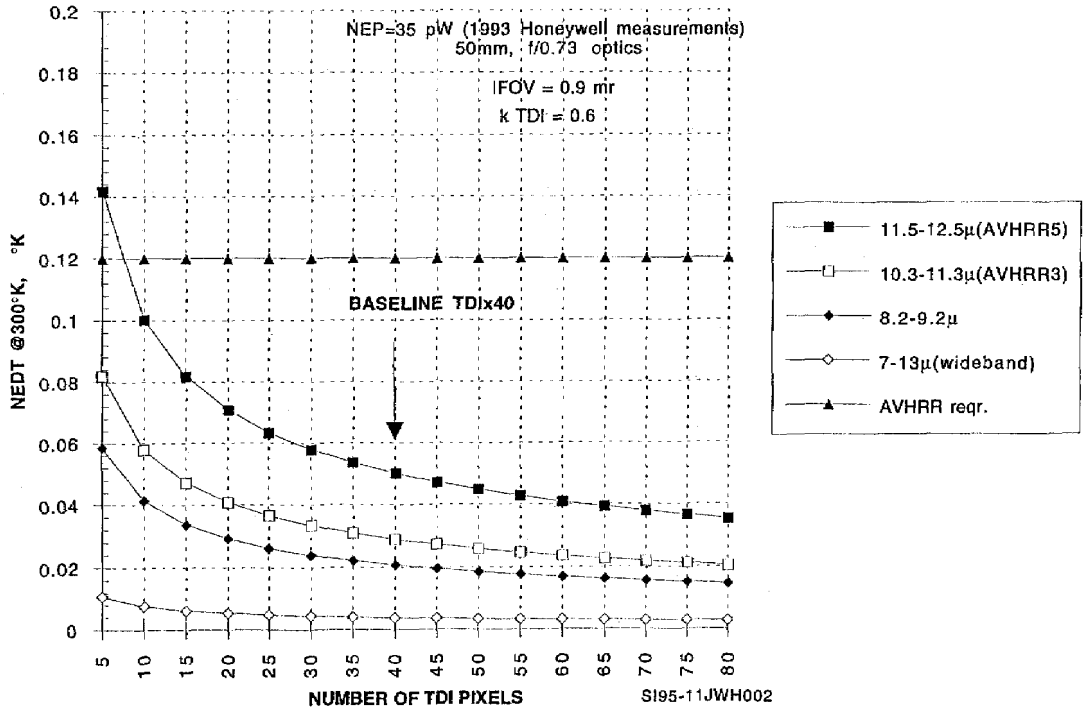

Figure 4. Uncooled ISIR NEDT versus number of TDI pixels

Multispectral imaging is obtained by sequencing filters. Spectral selection is achieved by rotating the filter wheel containing the four band-pass filters, mounted directly in front of the focal plane. The four spectral filters were purchased from a commercial optical filter vendor. They are 1.0 inch diameter germanium/ZnSe multi-layer interference filters. Their in-band transmission is at least 95 %. Because the 1.0 micron spectral bandwidths are not particularly narrow, the effects of the fast optical system on band center, shape or width of the three narrow band filters are assumed to be negligible.

At TDIx40 imaging, one filter requires 1.33 seconds. In that time an image of 200 rows (280-2x40) is acquired with full 40 pixel integration. Each pixel has an IFOV of 0.91 mrad. At the nominal shuttle flight altitude, the surface resolution is 247 m per pixel. Each spectral TDIx40 image is thus about 50 km along track and 84 km cross track. The time to rotate the filter wheel and acquire the frame at the next wavelength was about 1.7 seconds, or about 12 km in distance. With the ¾ overlap between subsequent frame, every surface pixel was imaged at all four wavelengths. There is a small change in viewing angle for each wavelength, approximately 2.5°. TDIx10 was also tested during the mission. In this case, to lower data rate, a smaller along track number of rows was recorded for each wavelength, 80 rather than 200.

ISIR was intended to provide radiometerically calibrated imagery. As is standard for thermal infrared radiometers, the calibration was obtained by views to warm and cold black body targets. ISIR's onboard calibration system was designed to provide one- or two-point calibrations during routine operation. The onboard blackbody is heated or cooled by a stack of thermoelectric coolers. It is mounted off axis and is projected (out of focus) during calibrations onto the focal plane by a calibration mirror. During data-takes the calibration mirror is stowed off-axis. The overall optical transmission in any band is the product of the transmissions of all the transmitting elements in either calibration or data modes (during calibrations the ZnSe window is obscured from the view of the array by the calibration mirror). A calculation indicted that the drift in any offset from the window would not be a significant factor. During periodic views to the calibration target, there is a loss of image data. Short views to the calibration target were typically obtained at five minute intervals.

The ISIR electrical system consists of an electronics assembly and drive motors along with the necessary wiring connectors and cable harnesses to connect these subassemblies to each other and to the data tape recorder, and to the Hitchhiker remote interface unit (HRIU). ISIR, as a Hitchhiker payload, was provided by the HRIU with electrical power for the sensor and for auxiliary heaters and the signal interface with the ground station. The HRIU signal interface provided for a bi-level command to power ISIR on and off, an asynchronous low-rate data stream conveying operational commands up to ISIR and housekeeping data down to the ground station, and a medium-rate data link for relaying image data to the ground

station. The detector/camera was provided as a module, a LIRIS Prototype Uncooled IR Imager. The ISIR electronics assembly consists of 7 printed-circuit boards and two camera-electronics signal processing boards. The Integrator Board provides the interface with the detector module electronics and performs real-time TDI and frame averaging. The Calibration Processor Board contains a V25 microprocessor and memory to calculate and store the gain and offset coefficients for each pixel in each spectral band. The I/O Processor Board contains the I/O V25 microprocessor and the control and data interfaces. The Hardware Driver Board contains the drivers for the filter wheel stepper motor, the calibration mirror motor, the electronics-housing fan, and the blackbody. Two Power Supply Boards generate the required voltage forms from the 28 V input power provided by the HRIU.

Four auxiliary 20 Watt Kapton strip heaters were mounted in the Hitchhiker canister to maintain the temperature above –20 C on orbit. ISIR housekeeping data was recorded by the data tape recorder, and periodically telemetered down to the ground station during the STS-85 mission. Housekeeping data included voltages, currents, and the temperatures of ISIR components that were monitored by 21 thermistors located in instrument subassemblies. The ISIR housekeeping temperatures are used to calculate the instrument radiation background.

Laboratory testing of the instrument performance before and after the flight experiment were an important part of the experiment plan. In the various modes and spectral bands, responsivity and noise measurements were made using a commercially available, 10-inch square aperture, precision laboratory blackbody and a liquid nitrogen target. The blackbody is operable between 15 and 50 C with 0.001 C temperature uniformity and stability. In each mode and spectral band, ISIR viewed the blackbody and data was recorded for 5 to 15 minutes at each temperature. The temperature was raised in 5 or 10 C increments from 15 to 55 C. For all laboratory and flight measurements the 1-inch thick ZnSe window was in place.

During preflight calibration and performance measurements, prior to viewing the external blackbody at each temperature, ISIR was run through its two-point on-board calibration procedure. The purpose of this was to compare the calibration accuracy of the ISIR on-board system with that of the external precision blackbody. After the onboard calibration was completed, imagery was recorded of the external blackbody at a fixed temperature. From the data recorded in this manner at the various external blackbody temperatures, the gains, offsets and noise were calculated. The LIRIS camera came with a table of pixel gains stored in memory. Offsets were updated for image display by means of the reset command. In analysis of all image data, however, pixel gains were recalculated rather than using values stored in memory. Analysis of preflight calibration data before the STS-85 mission revealed that a black-anodized iris, intended to be stopped down during on-board calibrations, was improperly designed. The difficulty was that its blackbody emission swamped that of the onboard blackbody, contributing more than half of the radiance during views of room temperature or colder targets. This effectively eliminated the low temperature calibration target. For on-orbit and post-flight measurements, the decision was therefore made to keep the iris fully open and use the blackbody for one-point calibrations only, with its temperature allowed to drift with the instrument ambient temperature. In this way the iris and blackbody, both out of focus at the detector plane, contributed approximately the same amount of radiance. Views to space during shuttle maneuvers could be used for cold calibration data.

There were a number of compromises to the ISIR design as a shuttle experiment that would not be necessary for a free flight instrument on a LEO satellite. It is most desirable to obtain the routine calibration by a view to cold space, but this was not possible due to the restrictions of placing the instrument into a Hitchhiker canister. In order to obtain continuous imaging and the highest stability, the calibration data should be obtained as part of the spectral imaging sequence. Also there should be a careful design of an isothermal shield encompassing the detector field other than the image signal. These were not possible within the restrictions of the shuttle project.

3. FLIGHT EXPERIMENT

The ISIR Hitchhiker experiment was flown on the STS-85 mission in August 1997. ISIR was one of twelve Hitchhiker experiments that were carried in the shuttle bay on two cross bay Hitchhiker bridge assemblies. ISIR and its complementary experiment, SLA, were part of the Technology Application and Science (TAS-01) bridge mission. In addition to the Hitchhikers, STS-85 also carried two large, main payloads. Overall STS-85 was one of the most complex shuttle missions flown by NASA.

There were three aspects of the ISIR experiment that were firsts from space for cloud science. One is the combination with direct laser measurements of cloud height as mentioned above. Secondly a global data set of thermal infrared imagery at near ¼ km resolution was acquired. The advantage of high resolution for cloud imagery is that the cloud fraction is correctly sampled.[4] For the 4 km or greater pixel size that is typical of operational cloud imagers, partially filled cloud pixels are difficult to detect, and cloud fraction is overestimated. A ¼ km resolution is considered to be optimal for cloud fraction. The advantage of high resolution infrared imaging over high resolution visible data is that the sampling will be diurnally unbiased. The additional new observation from space was the use of the 8.5 μm wavelength, which has applications for cloud particle discrimination.

The goal for ISIR on the flight mission was to acquire 60 hrs of observations, along with SLA, for operational testing of the technology and to obtain a representative data set for global cloud cover. The requirements for the various experiments on the shuttle restricted the amount of time the shuttle bay was in its normal earth viewing mode. Some experiments required solar and astronomical pointing. Special consideration and precautions where necessary to prevent damage or overheating of ISIR and other instruments during the solar views. The overall time line for the nine day mission involved repeated maneuvering of the shuttle flight attitude to accomplish goals for various experiments. An advantage to our experiment from the frequent maneuvers was many opportunities to acquire calibration and test data against cold space. Data against cold space was acquired just before and just after each earth viewing data period.

For ISIR a stable, earth pointing flight attitude was required. The TDI imaging requires that the platform be correctly oriented during the integration period. Roll movement will cause pixel smearing. Also the velocity vector relative to the scene must be such that it is parallel to the array columns. Any cross track motion component will also have the effect of pixel smearing. For the ISIR TDIx40 imaging, a special flight operation mode was requested for a high resolution imaging with less than 1/8 pixel smearing. The needed roll stability was 0.01^o per second. The yaw accuracy to the ground velocity vector was +/- 0.1^o. Due to the rotation velocity of the earth, yaw correction as a function of latitude was needed. The zero cross track velocity steering is used by other experiments and has the terminology for the shuttle of 'zero Doppler steering'. The ISIR high resolution mode requirements were within the capabilities of the shuttle system. Another issue for pixel smearing is the flight altitude. Due to developmental limitations, the ISIR frame rate was fixed (a variable rate was an unmet goal). In order to maintain image smearing below 1/8 pixel, a flight altitude of 141 +/-3 nm was needed. The altitude of clouds varies up to 20 km, or 12 nm, in the atmosphere. Higher clouds tend to be more diffuse and cover a greater extent. The high resolution requirements were only desired for lower clouds. The required flight altitude was compatible with the shuttle mission. The mission plan included eight hours where the shuttle altitude and attitude were appropriate for the ISIR high resolution tests. The addition mode at TDIx10 was planned for observation periods when the shuttle was in normal earth view flight altitude. An altitude range of 150 +/- 12 nm and 0.1^o roll stability was sufficient to keep the motion blur to less the one pixel. The TDIx10 was used for a low resolution operation mode.

As mentioned above, the software design of ISIR includes several operational modes. In addition to TDI imaging, data can be recorded in direct frame integration, or camera mode. The camera mode operation was used for several special flight data tests. A research question for cloud radiation is the directionality of outgoing longwave, or thermal IR, radiation. The question is of interest for example since cloud retrievals from geosynchronous satellite data require a model of the angular dependence of the cloud radiation. An experiment was planned to take advantage of the maneuverability of the shuttle to image cloud scenes from multiple angles. For the measurements, ISIR was operated in the camera mode as the shuttle rotated at the proper rate to keep one cloud scene in view. Three of the measurements were planned for the mission, each roll requiring about five minutes. Another test was to use ISIR for single frame, full dimension image acquisition during normal nadir earth viewing. Since there is a large overlap between frames, each cloud is viewed from multiple angles within the camera FOV limit. The application of the multiple frame viewing is to test stereo retrievals of cloud heights.

Overall all of the observation goals for ISIR were met on STS-85. Over 60 hrs of data were acquired in all of the planned flight test modes. The data was obtained intermittently during the nine days of the flight. The last flight day was planned for the special high resolution flight mode. Over ten hours of data were acquired in multi-wavelength TDIx40 mode with zero cross track velocity steering. Most observational data was acquired during shuttle crew sleep periods with automatic flight control.

An example of an ISIR cloud scene image from the shuttle is shown in Fig. 5. The data is for the 10.8 μm channel and was acquired in the TDIx40 mode. The observed radiance in shown by a grey scale where colder brightness temperature is whiter. Thus higher clouds are generally brighter in the image although the cloud thickness is also a factor. As verified by data from the SLA lidar, there are three distinct cloud layers at different heights. The linear cloud feature in Fig. 5 is likely an aged aircraft contrail. The total scene area is 85 km cross track and 200 km along the track. Thus an approximately 30 seconds of data at the one wavelength are shown. Overall the image is the combination of data from four TDI frames. An individual frame for another cloud image is shown in Fig. 6. The interesting feature in this image is a narrow line that is almost certainly a fresh aircraft contrail. The definition of the contrail illustrates the high resolution of the thermal imagery. A third example of the ISIR image data is shown in Fig. 7 where two of the islands of the Canary Island group are clearly shown. The scene also includes low clouds and clear ocean. An interesting feature is that gradients of ocean temperature are clearly seen on the right side of the image. It is estimated that changes of brightness temperature of less than a few degrees are resolved. The data in Fig. 7 is from the broadband channel. Overall the approximately thirty obits of ISIR data show many interesting scenes of clouds and land similar to that in Fig. 5-7. Additional data images from the experiment may be found on our Internet web site at http://isir.gsfc.nasa.gov/ including movie loops from the roll maneuvers that were performed for multi-directional cloud images.

The data of Fig. 5-7 are shown as uncalibrated data images. Processing of data is involved however. The detector used by ISIR was an early pre-production prototype. Approximately a third of the pixels were bad. These are removed in the

images by interpolation and replacement by surrounding good pixels. Also the raw images displayed offset gradients across the images. These have been removed by application of the blackbody calibration data. The blackbody data is used to construct a table to correct the offset across the scene. There are drifts over time and interpolation from one calibration sequence to the next is applied. At present data processing software is being completed to apply the radiometric calibration from blackbody data and produce registered and calibrated multi-spectral data.

Analysis of the preflight and postflight laboratory test data and flight data is in progress. For these measurements in each spectral band and mode pixel SNR are calculated as:

$$SNR_i = (m_i(T_2) - m_i(T_1))/\sigma i$$

where T_1 and T_2 are two different scene temperatures (K), $m_i(T_j)$ is the mean raw signal at T_j over N frames, and σ_i is the mean standard deviation of the raw signal over N frames.

Pixel NETD in K is calculated from the SNR as:

$$NETD_i = (T_2 - T_1)/ SNR_i$$

Pixel gains and offsets are calculated from averages of N images acquired at three or more scene temperatures, relating raw signal counts (dn) to the incident radiant flux (Watts) by means of a quadratic least-squares line fit. Pixel gain Gi

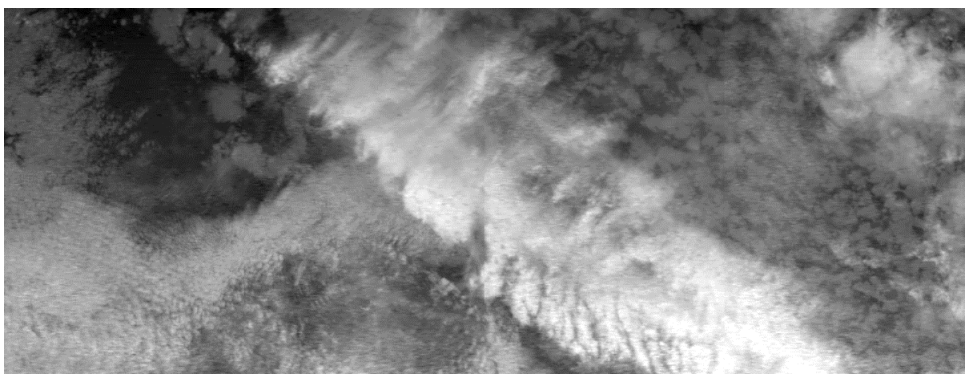

Figure 5. A cloud scene composed of high, mid-level and low cloud layers, imaged in TDIx40 mode with the ISIR instrument. The image swath is 85x200 km.

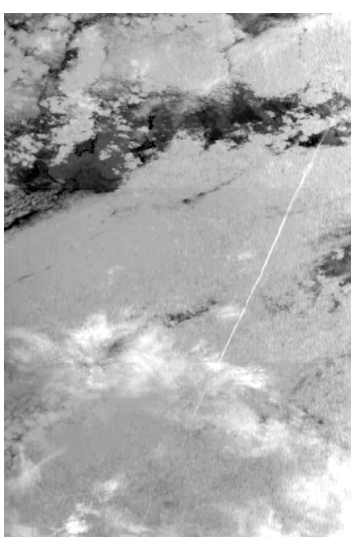

Figure 6. A cloud scene imaged by ISIR where a newly formed aircraft contrail is imaged at the ¼ km resolution. The image swath is 85x50 km

Figure 7. A TDIx40 ISIR image of two of the Canary Islands with ocean temperature gradiants and low clouds visible.

(Watts/dn) is then expressed in terms of the resulting quadratic and linear coefficients; the offset is then the constant term. The percent non-linearity of response is calculated from the ratio of the quadratic to the linear coefficients. Signal drift with time was characterized by plotting raw signal as a function of time using image frames acquired while ISIR viewed the external blackbody at constant temperature. Calculation of single pixel and array average drift were made. In TDI some of the sub-pixels whose signals are co-added are dead. Because the location of these bad sub-pixels is fixed and known, their effect on the resulting TDI pixel is taken account of in analysis by multiplying each TDI pixel by an effective gain and offset. The gain and offset values are determined from the number of contributing bad sub-pixels. All noise analysis and calibration in TDI is done on images corrected this way. For flight and post-flight measurements, housekeeping temperatures are recorded; instrument background is calculated and taken account of in noise and calibration calculations. Calculations of gain on orbit are necessarily limited to linear line-fits of instrument raw signal to radiant flux resulting from views of space and the onboard blackbody.

The result of the preliminary analysis of laboratory and space flight data is that the drift and NEDT performance of the instruments were within a factor of two to three of the expected limits. The NEDT for the flight data exhibited values between 0.09 to 0.22 ^{o}K for the narrow band channels with a cold target in the TDIx40 mode. Drift of the array output is typically 1-2 counts in one minute viewing at a constant scene temperature. Non-linear quadrature terms are small. The full analysis and diagrams of performance are not yet completed.

4. SUMMARY

ISIR is a 4 band infrared imaging system which utilizes a single uncooled microbolometer array and which has now been flight tested as a Hitchhiker experiment on a space shuttle mission. The performance goals were to obtain ¼ km resolution imagery of cloud and land scenes with accuracy in the range of 0.1 ^{o}K equivalent brightness temperature. Extremely good quality imagery was obtained at all channels for cloud, land and oceans scenes from the flight experiment. Preliminary analysis of test and flight data indicates the accuracy goal was met to within a factor of two to three. The detector that was used was an early pre-production prototype, and there are many design improvements that would be possible to improve the radiometric precision, stability and accuracy. Overall the preliminary results indicate that the uncooled microbolometer array detectors are a valid approach for some application requirements of infrared imaging from space. Significantly lower size and cost imagers with much less impact on satellite resources may be possible.

5. ACKNOLEDGEMENTS

The authors wish to express their appreciation to Dr. Robert Curran of the Radiation Sciences program, Earth Sciences Enterprise division, NASA Headquarters for his support and assistance in the development of the shuttle experiment. They would also like to credit the support and assistance that was given by the Goddard Space Flight Center Hitchhiker payload branch and the Johnson Space Center shuttle operations program. The authors would also like to acknowledge the support of Mr. Ray Balcerak of ARPA, Mr. Jim Miller of the Army Night Vision and Electronics Sensors Directorate and the NPOESS Integrated Program Office.

6. REFERENCES

1. H. J. Kramer, "*Observation of the Earth and its environment",* 2nd ed., Springer-Verlag, Berlin, 1994.
2. J. D. Spinhirne, W. D. Hart and D. L. Hlavka, "Cirrus infrared parameters and shortwave reflectance relations from observations, *J. Atmo. Sci.,* 53, pp. 1438-1458, 1996.
3. R. A. Wood and N. A. Foss, "Micromachined Bolometer Arrays", *Laser Focus World*, 30, pp.101-106, 1994.
4. B. A. Wielicki and J. A. Coakley Jr., "Cloud retrieval using infrared sounder data: error analysis", *J. Appl. Meteror*., 20, pp. 157-169, 1981.